Bernee®

20 Inch Outdoor Camera Housing (With Infrared Lights)

Features

- Body is die-casting aluminum
- Side-opening roof for installing camera easily
- Installation mode: wall mounted
- Use environment: indoor/outdoor
- Protection grade: IP55
- Built In Heater/Blower (Optional)
- Input voltage: DC12V
- With 100m-infrared light, you can make DIY IR camera by adding zoom camera or box camera inside
- Suitable bracket:BN-B227(with BN-B230)

Specifications

Model	BN-7160-IR	BN-7160SBH-IR
Material	Body: aluminum die-casting, Window: optical glass	
Dimension	534×187×151mm(L×W×H)	
Inner Usable Dimensions	360×120×95mm(L×W×H)	270×120×95mm(L×W×H)
Blower & Heater	No	With
Input voltage	DC12V	
Heater Switch	-	ON:5°C, OFF: 20°C
Blower Switch	-	ON: 45°C, OFF: 20°C
Power Consumption	-	Heater: 60W , Blower: 3W
Window Dimensions	Φ40mm	
IR Distance	100m	
IR Status	Light below 10 Lux, CDS automatically open	
Connection Hole	Φ11.9mm x 2mm	
Weight	3.13kg	3.25kg
Use Environment	Indoor/Outdoor	

Operating Temperature	-10°C～45°C	-25°C～60°C

Dimensions
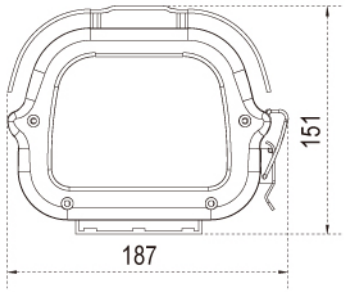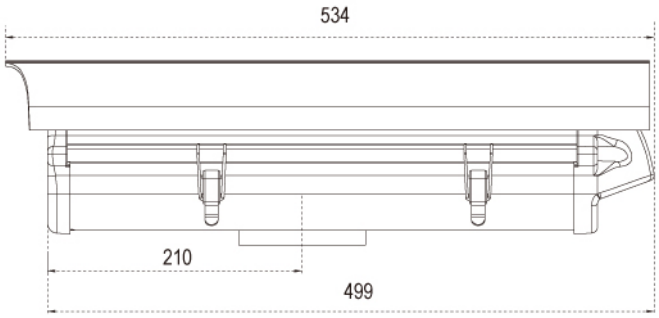
Back View	Side View