Bernee®

20 Inch Outdoor Camera Housing

Features

- Body is die-casting aluminum
- Side-opening roof for installing camera easily
- Installation mode: wall mounted
- Use environment: indoor/outdoor
- Protection grade: IP55
- Built In Heater/Blower (Optional)
- Suitable bracket:BN-B227(with BN-B230)

Specifications

Model	**BN-7160**	**BN-7160SBH**
Material	Body: aluminum die-casting, Window: optical glass	
Dimension	534×187×151mm(L×W×H)	
Inner Usable Dimensions	380×120×95mm(L×W×H)	290×120×95mm(L×W×H)
Blower & Heater	No	With
Input voltage	-	DC12V
Heater Switch	-	ON:5°C, OFF: 20°C
Blower Switch	-	ON: 45°C, OFF: 20°C
Power Consumption	-	Heater: 60W , Blower: 3W
Window Dimensions	115~100×85mm(H)	
Connection Hole	Φ11.9mm x 2mm	
Weight	2.93kg	3.05kg
Use Environment	Indoor/Outdoor	
Operating Temperature	-10°C～45°C	-25°C～60°C

Dimensions
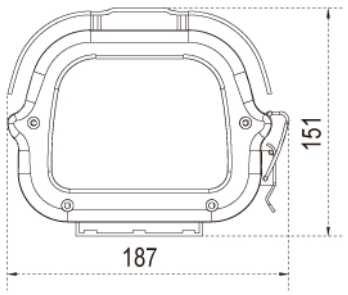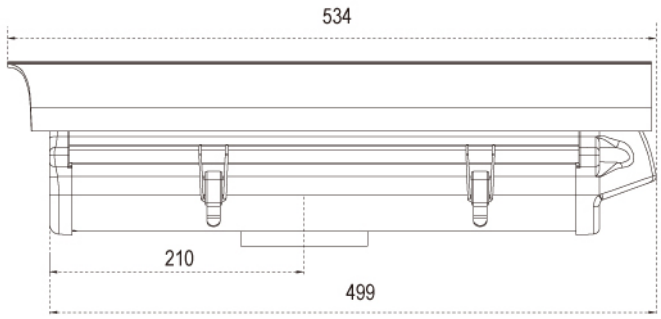
Back View	Side View